DC
Geared Motors

FENGTECH
AC&DC Geared Motor Expert

www.fengtech.com/en/

■ GY37

Applications:

Auto Shutter, Cleaning Machine, Money Detector,
Peristaltic Pump, HVAC System
Electric-drive curtain, Airbreak Switch,Automatic Door-lock
Advertisement lamp, Medical Equipment
Face Tissue

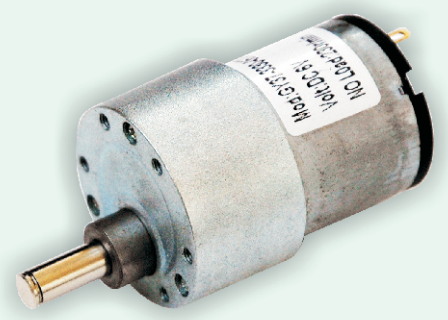

Drawing

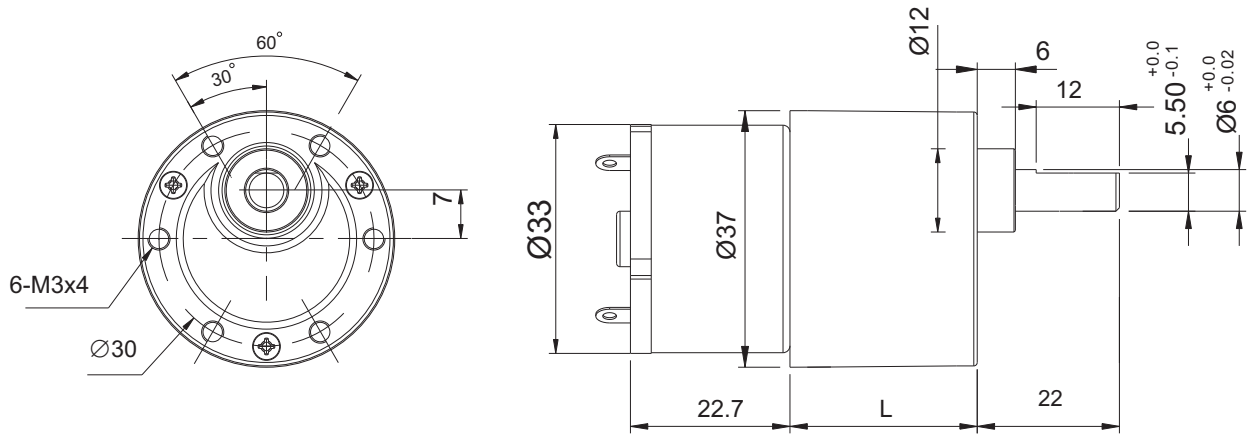

Spcification

Model	Rated Voltage (V)	No Load		At Max Efficiency					Stall		Gearbox	
		Speed (RPM)	Current (A)	Speed (RPM)	Current (A)	Torque (N.m)	Torque (lb.in)	Power (W)	Torque (N.m)	Current (A)	Gear Ratio	Length (mm)
GY37-124000-30K	12	133	0.05	110	0.14	0.06	0.53	0.7	0.45	0.7	1:30	21.5
GY37-124000-90K	12	45	0.05	36	0.14	0.17	1.50	0.64	1.0	0.7	1:90	24
GY37-124000-270K	12	15	0.06	12	0.14	0.42	3.71	0.53	2.7	0.7	1:270	26.5
GY37-124000-810K	12	5	0.06	4	0.14	1.2	10.6	0.5	/	0.7	1:810	30
GY37-122800-30K	12	93	0.05	73	0.14	0.045	0.40	0.34	0.31	0.2	1:30	21.5
GY37-122800-90K	12	30	0.05	24	0.14	0.13	1.15	0.33	0.8	0.2	1:90	24
GY37-122800-270K	12	10	0.06	8	0.14	0.35	3.10	0.29	2.0	0.2	1:270	26.5
GY37-122800-810K	12	3.5	0.06	2.7	0.14	0.88	7.80	0.25	6.0	0.2	1:810	30

Voltage can make as customer's requirement.

- For more detailed information,feel free to contact us.

Tel:86-574-88269898 Fax:86-574-56664788 export@fengtech.com